ADANDE MATCHBOX UNIT (VCM)

Dimensions |
Elevation & Plan View

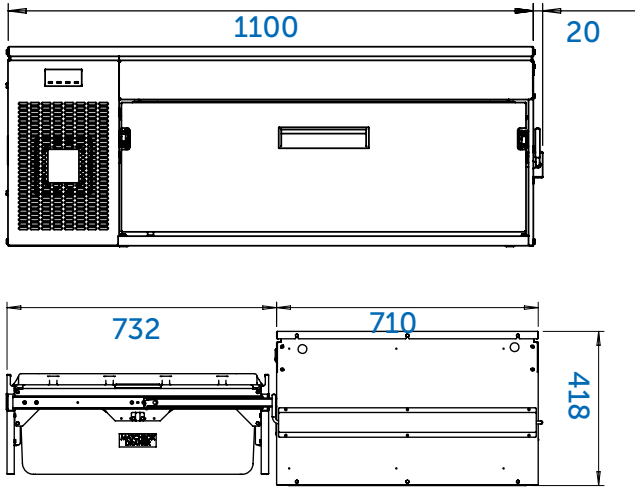

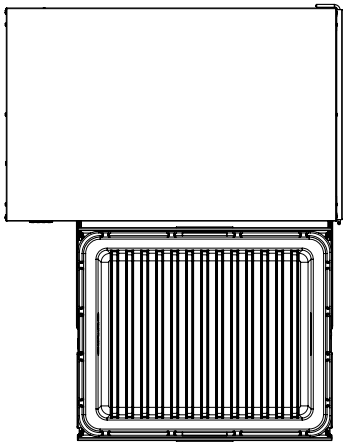

Dimensions for VCM1/FBT

Fridge to Freezer.
Each drawer is switchable in minutes. Accurate and stable at any temperature.
(-22°C to +15°C)

Storage Capacity Per Drawer
4 x 1/1 GN Pans
100 mm Deep
or equivalent

VCM - Under Counter (or Built-in) Matchbox Unit

Pass-Through or 'Matchbox' (VCM) units give access to stored ingredients from both sides of an island unit - an ergonomic solution for commercial kitchens where space is limited.

Matchbox units are available with simple cover tops (T) for under-counter applications and solid worktops (W) where food preparation surfaces are required.

For built-in applications, one and two drawer Matchbox units can be suited in, cassette style, to a cook range, or under-counter for those designs where the kitchen equipment is mounted on a plinth, raising everything above floor level

OPTIONS

Top and Base |
Worktops and Castors

(W) - load bearing

(T) - non load bearing

	Standard Castors		Small Castors		Locking Roller Base		Small Locking Rollers		Flat Base			
Finished Height & Load Bearing Weight with Worktop (W)	900 mm 230 kg	VCM2/CW	879 mm 0 kg	VCM2/SCW	856 mm 225 kg	VCM2/RW	846 mm 225 kg	VCM2/SRW	825 mm 225 kg	VCM2/FBW	428mm 285kg	VCM1/FBW
Finished Height & Load Bearing Weight with Cover Top (T)	891 mm 0 kg	VCM2/CT	870 mm 0 kg	VCM2/SCT	847 mm 0 kg	VCM2/RT	837 mm 0 kg	VCM2/SRT	816 mm 0 kg	VCM2/FBT	419mm 0kg	VCM1/FBT
(R1) REFRIGERANT R404A												
(R2) REFRIGERANT R600a												
(BC) BLAST CHILL AVAILABLE												

CLIMATE TESTING: Tested to Climate Class 4 (30°C and 55% relative humidity) for temperature and energy consumption
Tested to Climate Class 5 (40°C and 40% relative humidity) for temperature
MAINS: 230 Vac 50 Hz also 60 Hz available

ADANDE® MATCHBOX UNIT (VCM)

Applications

- Access from both sides
- Central island bulk storage
- High productivity prep station
- Perfect for small cramped kitchens
- Flexible pass solution
- Bespoke pass options: gantry and worktop extensions

Operational Benefits

- Flexibility: works as fridge or freezer
- Blast chiller option also available
- Reliable: amazing temperature stability
- Green: extremely energy efficient
- Cuts food wastage
  - » Food does not dehydrate
  - » No freezer burn or ice crystals
  - » No condensation on the food
- Ergonomically efficient
- Minimal maintenance costs
- Quick and easy to clean
- Robust and reliable

VCM R1 R404A

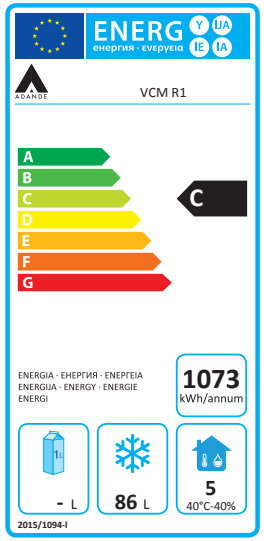

VCM R2 R600a

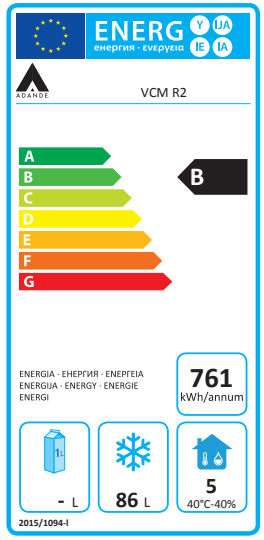

Energy rating per drawer module

The new EU Eco Design regulation will ensure that newly produced professional refrigerators and freezers will have to fulfil minimum energy efficiency requirements as of 1st July 2016. This will make understanding energy efficiency much simpler for consumers and will accelerate the growing shift in the market toward sourcing more energy efficient products

Tel: +44 (0) 844 376 0023 | Fax: +44 (0) 1502 533794 | Email: info@adande.com | www.adande.com